STEP

Caratteristiche generali
Acciaio inox (AISI 304) spazzolato. Filtro antigrasso metallico, asportabile e lavabile. Filtro carbone.

General features
Scotch brite Stainless steel (AISI 304). Metallic grease filter, removable and washable. Charcoal filter.

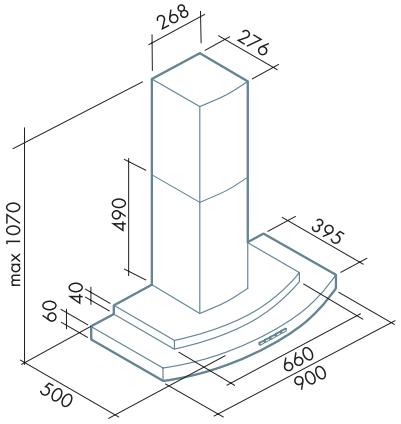

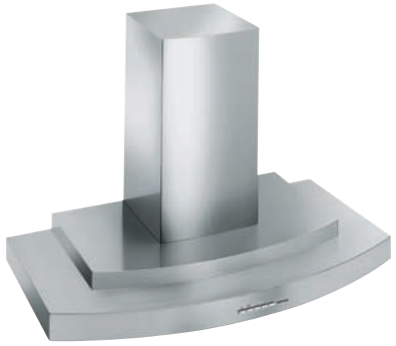

NEW!
Faretto alogeno con apertura "Easy Open"
Halogen light with "Easy Open" system

	motore e comandi / motor and control			filtri / filters model			illuminazione / lighting					
isola/island	450 m³/h 3 vel.	600 m³/h 3 vel.	800 m³/h 4 vel.	"Base"	"Top"	carbone/charcoal	Halogen lamp	Dicroica lamp	Incandescent lamp	Fluorescent lamp		
/												
/												
/												
parete/wall												
/												
90	P.M.	P.M.			278 x 301 mm	3	2 x 20 Watt					
/												

ACCESSORI OPZIONALI DISPONIBILI: Prolunga camino parete (solo h 960 mm) - Kit parete acciaio - Salvietta *Magic Steel*
AVAILABLE OPTIONAL ACCESSORIES: Wall chimney extension (only h 960 mm) - Stainless steel backsplash - *Magic Steel* protective and cleaning wipe

STEP

Design

450 | 600 |

AISI 304