# IRIDE

**Caratteristiche generali**
Acciaio inox (AISI 304) spazzolato. Filtro antigrasso metallico, asportabile e lavabile. Filtro carbone. Pulsantiera elettronica.

General features
Scotch brite Stainless steel (AISI 304). Metallic grease filter, removable and washable. Charcoal filter. Electronic optical control.

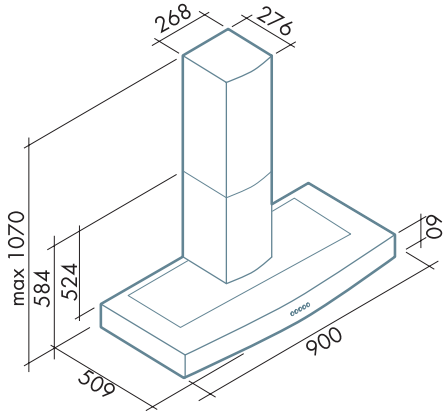

Filtro antigrasso metallico, asportabile e lavabile.

Metallic grease filter, removable and washable.

| isola/island | motore e comandi / motor and control | | | filtri / filters | | | illuminazione / lighting | | | | | |
|---|---|---|---|---|---|---|---|---|---|---|---|---|
| | 450 m³/h 3 vel. | 600 m³/h 3 vel. | 800 m³/h 4 vel. | "Base" | "Top" | carbone/charcoal | Halogen lamp | | Dicroica lamp | | Incandescent lamp | Fluorescent lamp |
| / | | | | | | | | | | | | |
| / | | | | | | | | | | | | |
| / | | | | | | | | | | | | |
| **parete/wall** | | | | | | | | | | | | |
| / | | | | | | | | | | | | |
| 90 | | P.EL. | P.EL. | | 285 x 301 mm | 3 | | | | | | 1 x 21 Watt |
| / | | | | | | | | | | | | |

ACCESSORI OPZIONALI DISPONIBILI: Aspiratore sottotetto (solo versione 800 m³/h) - Aspiratore esterno (solo versione 800 m³/h) - Prolunga camino parete (solo h 960 mm) - Kit parete acciaio - Salvietta *Magic Steel*
AVAILABLE OPTIONAL ACCESSORIES: Under-roof extractor fan (only 800 m³/h version) - Outdoor extractor fan (only 800 m³/h version) - Wall chimney extension (only h 960 mm) - Stainless steel backsplash - *Magic Steel* protective and cleaning wipe

# IRIDE

# Design

new

600 | 800
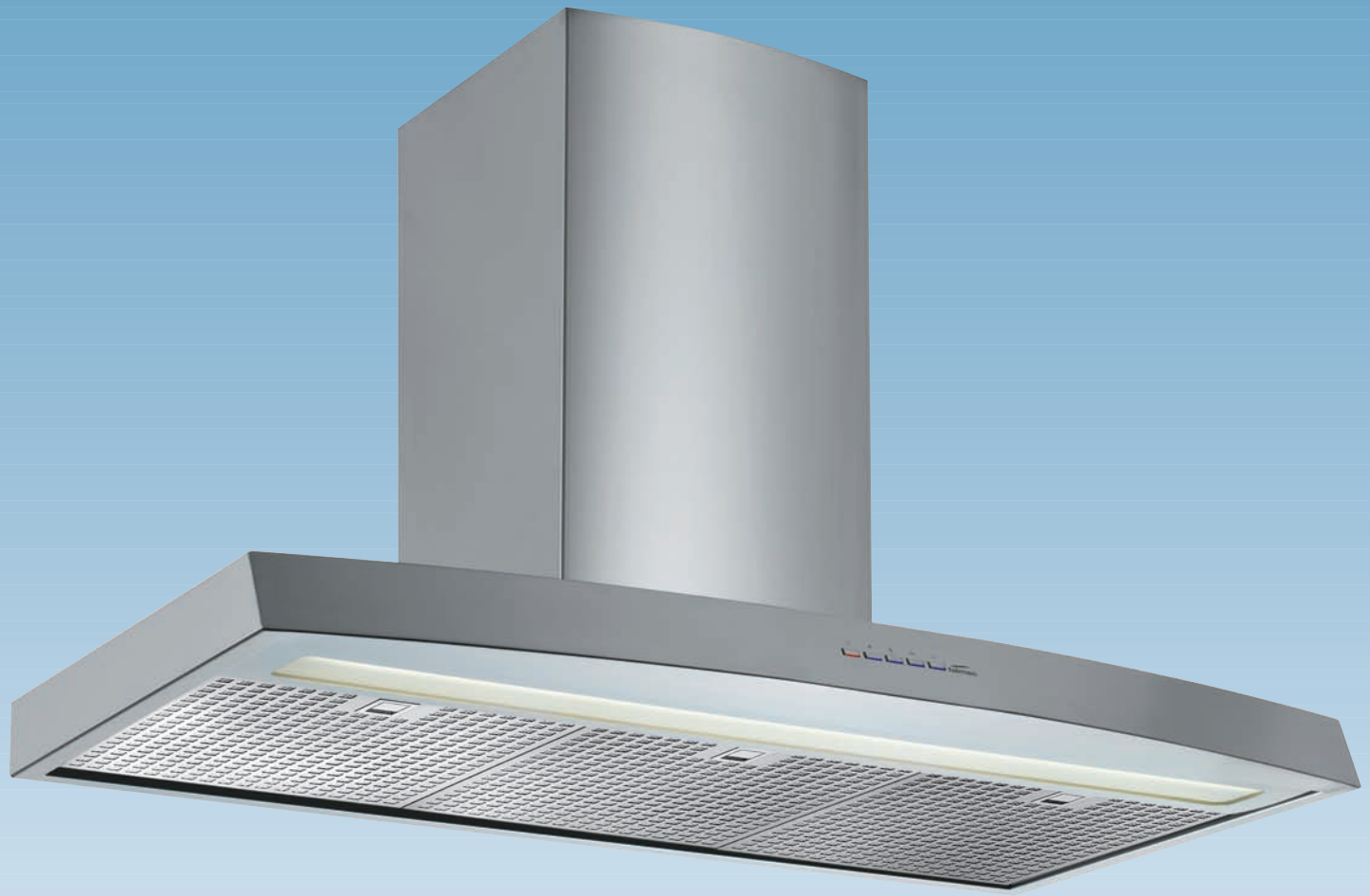
AISI 304